DRAWING Nº.
RG-100-103

IF IN DOUBT ASK DO NOT SCALE

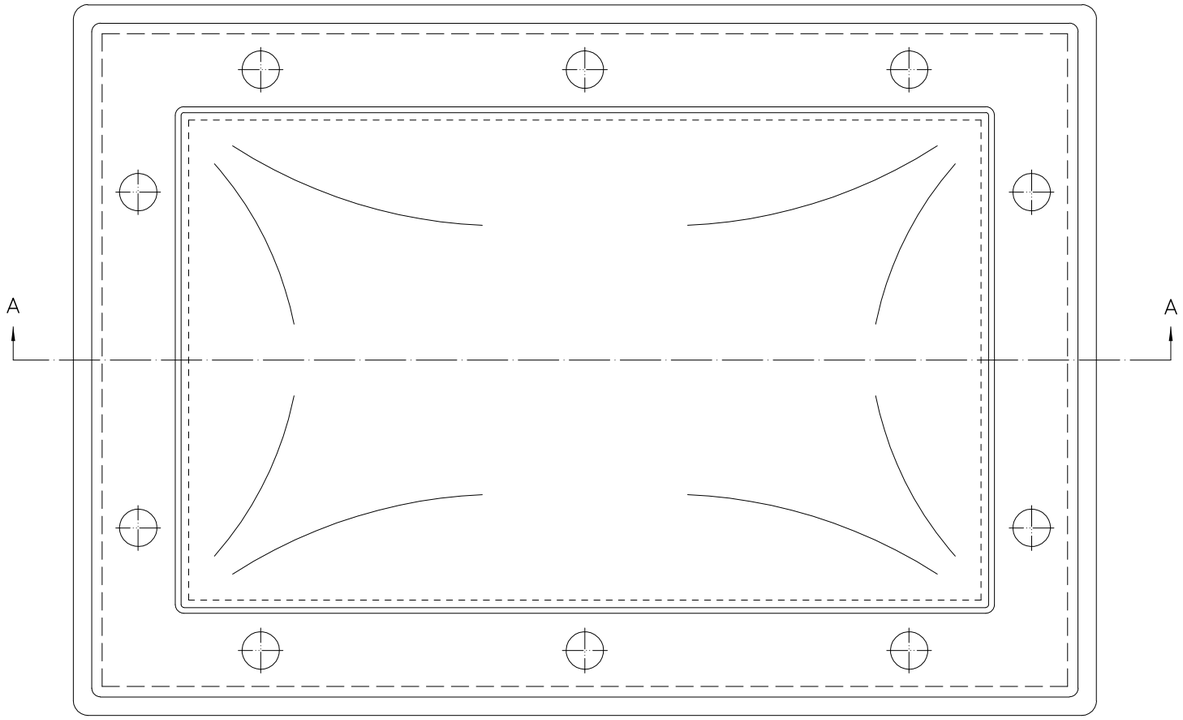

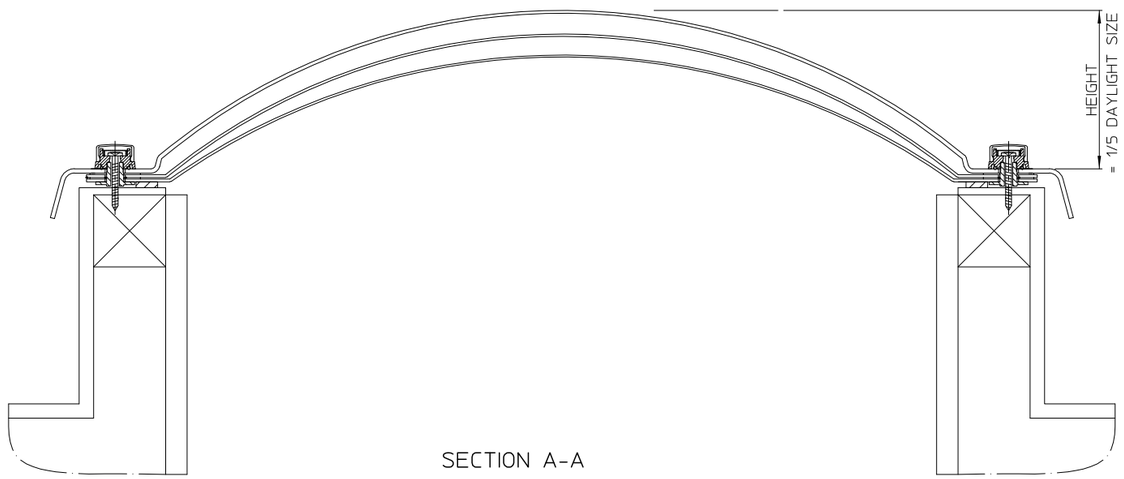

SECTION A-A

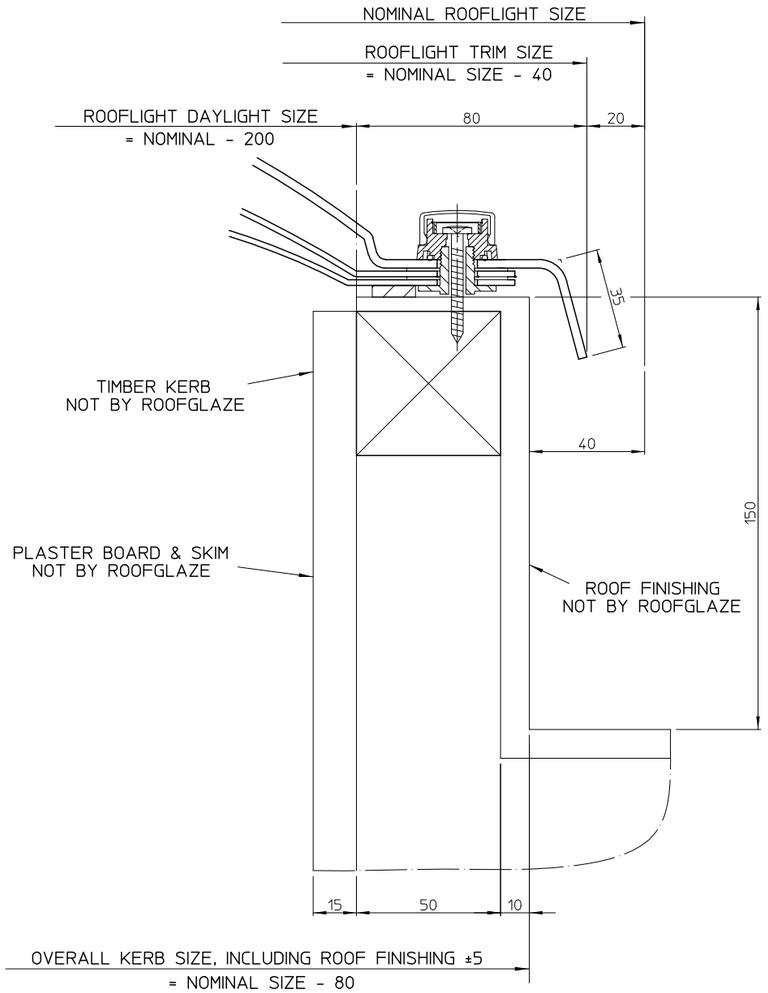

KERB SECTION VIEW

THIS DRAWING MUST NOT BE COPIED OR PASSED TO A THIRD PARTY WITHOUT WRITTEN CONSENT FROM ROOFGLAZE LIMITED.

CHECKED
DATE
DRAWN R. PADDICK
DATE 21-May-2009

TOLERANCE UNLESS OTHERWISE STATED
DIMENSIONS IN MM
SCALE 1:2 @ A1
1:1 @ A1

MATERIAL POLYCARBONATE
FINISH CLEAN

REV	AMENDMENTS	SIGNED	CHECKED	DATE

Roofglaze Limited,
30-32, Little End Road, Eaton Socon, St Neots, Cambs, PE19 8JH
Telephone 01480 474797. Fax 01480 474774.
E-mail technical@roofglaze.co.uk

ROOFGLAZE

TITLE: ECONOLITE TRIPLE SKIN DOME DIRECT TO BUILDERS KERB

A1

QUOTE Nº.

DRAWING Nº. RG-100-103

REV