DRAWING NO.
RG-120-10
SHEET 2 OF 4

IF IN DOUBT ASK DO NOT SCALE

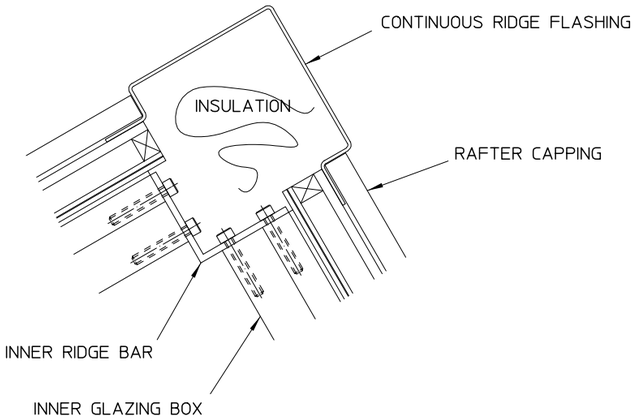

SECTION D-D

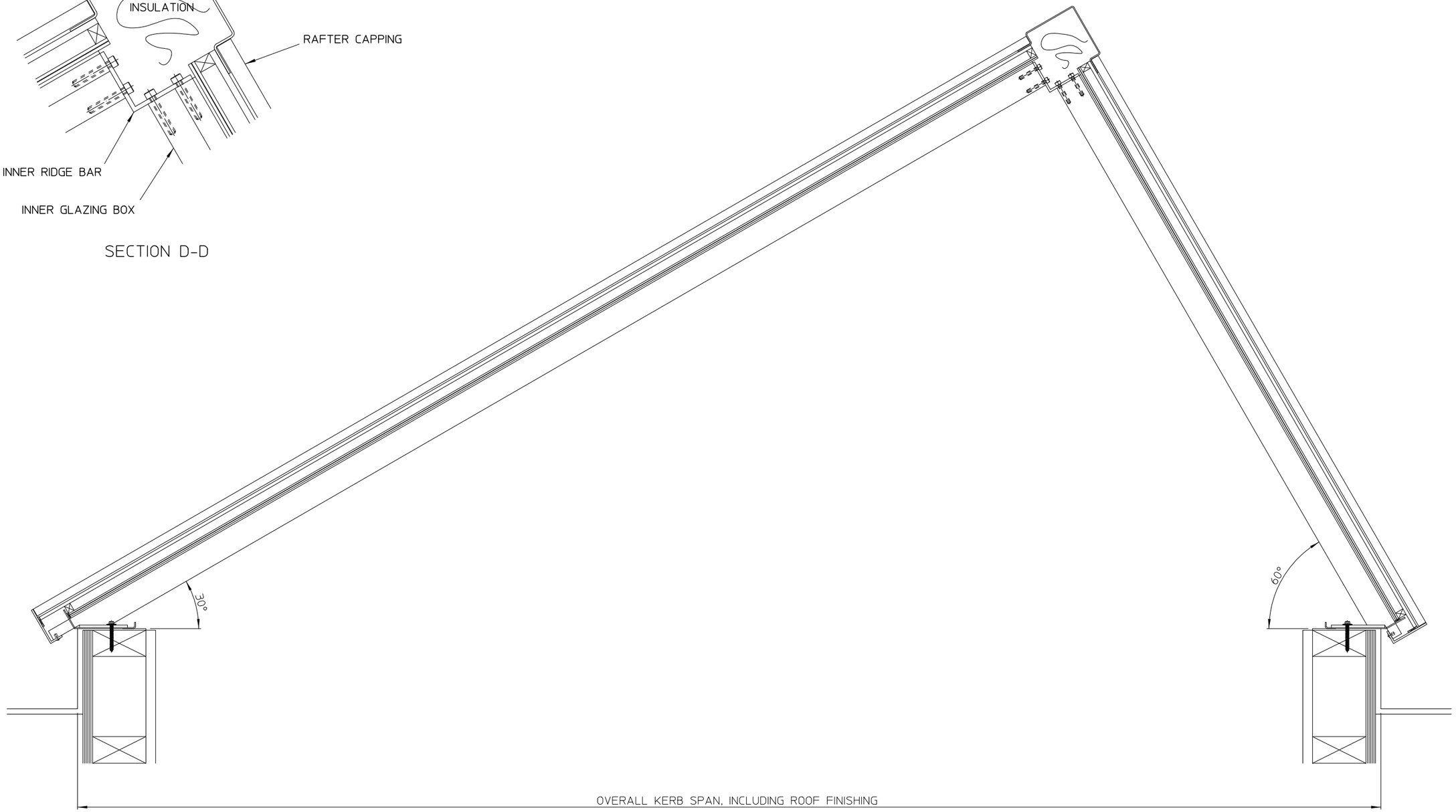

SECTION A-A

SPAN RANGE 1200 TO 2500

THIS DRAWING MUST NOT BE COPIED OR PASSED TO A THIRD PARTY WITHOUT WRITTEN CONSENT FROM ROOFGLAZE LIMITED.	CHECKED DATE	TOLERANCE UNLESS OTHERWISE STATED ±0.3	MATERIAL ALUMINIUM GLASS						
	DRAWN R. PADDICK DATE 17-Mar-2011	DIMENSIONS IN MM	FINISH POLYESTER POWDER COATING						
		SCALE 1:4 @ A1 1:2 @ A1		REV	AMENDMENTS	SIGNED	CHECKED	DATE	

Roofglaze Limited,
30-32 Little End Road, Eaton Socon, St Neots, Cambs, PE19 8JH
Telephone 01480 474797. Fax 01480 474774.
E-mail technical@roofglaze.co.uk

ROOFGLAZE

TITLE: RG-120 NORTHLIGHT FULL SPAN SECTION VIEW

A1

QUOTE NO.

DRAWING NO. RG-120-10 SHEET 2 OF 4

REV