IF IN DOUBT ASK DO NOT SCALE

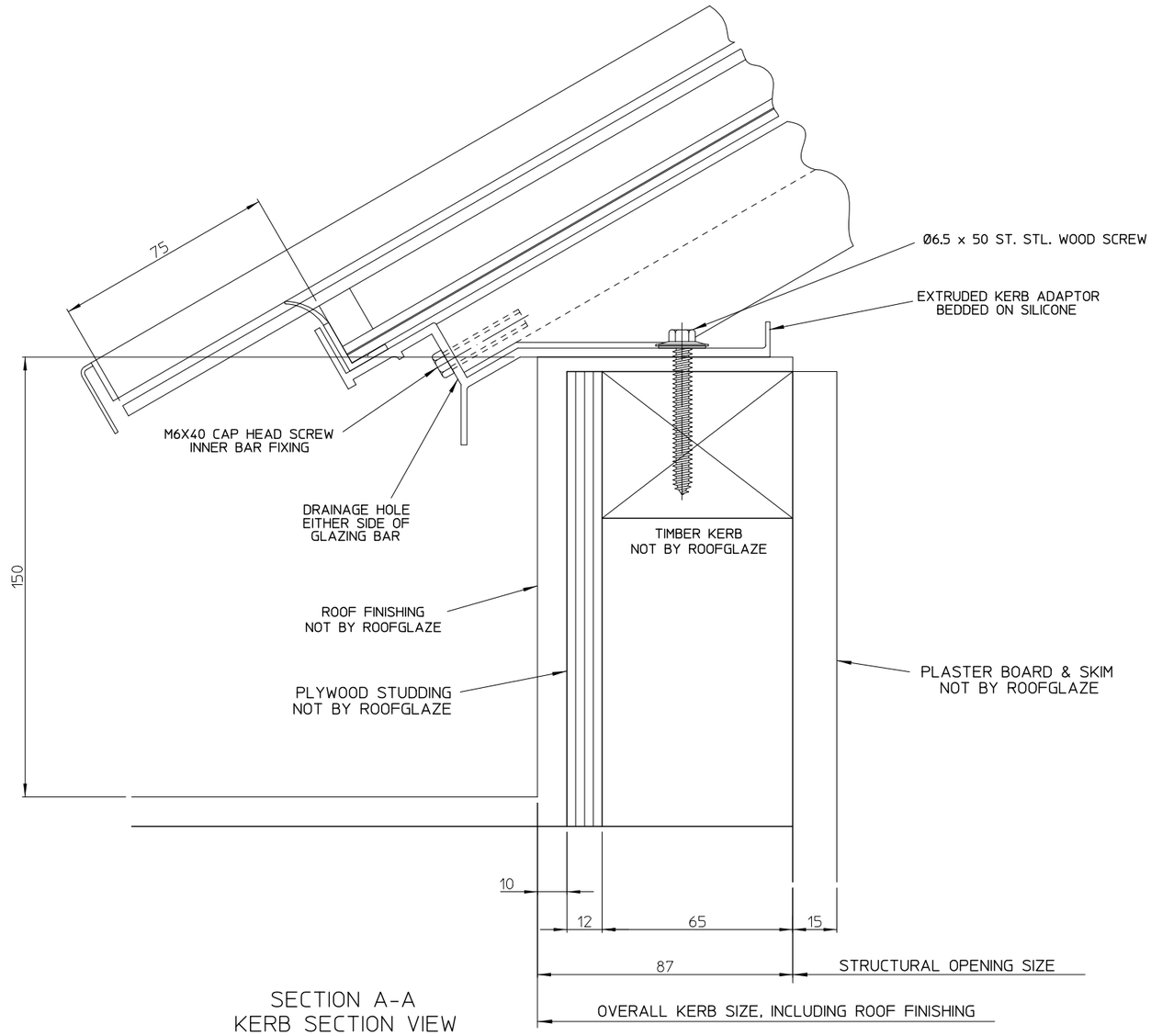

SECTION A-A
KERB SECTION VIEW

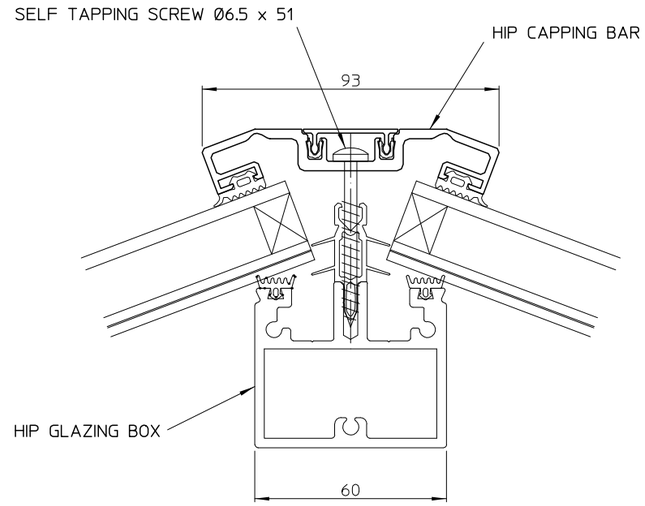

SECTION B-B
HIP RAFTER SECTION VIEW

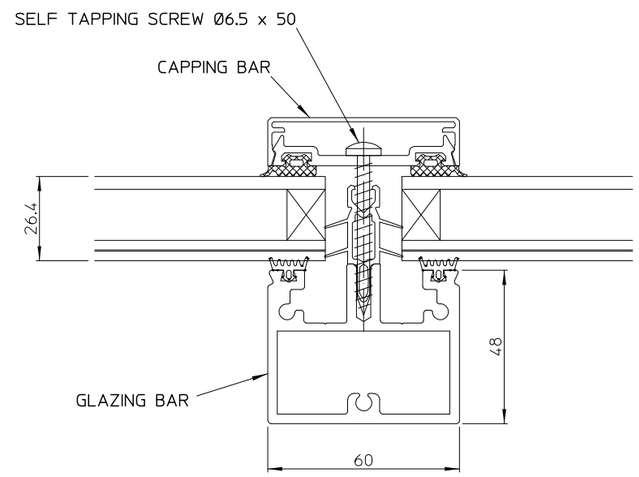

SECTION C-C
CENTRE JACK RAFTER SECTION VIEW

THIS DRAWING MUST NOT BE COPIED OR PASSED TO A THIRD PARTY WITHOUT WRITTEN CONSENT FROM ROOFGLAZE LIMITED.	CHECKED DATE DRAWN R. PADDICK DATE 13-Feb-2009	TOLERANCE UNLESS OTHERWISE STATED ±3 DIMENSIONS IN MM SCALE 1:1 @ A1	MATERIAL ALUMINIUM GLASS FINISH POLYESTER POWDER COATING	REV	AMENDMENTS	SIGNED	CHECKED	DATE

Roofglaze Limited.
Unit 4, Little End Road, Eaton Socon, St Neots, Cambs. PE19 8JH
Telephone 01480 474797. Fax 01480 474774.
E-mail technical@roofglaze.co.uk

ROOFGLAZE

TITLE: RG-40 PYRAMID SPAN RANGE 1500 TO 2000

A1

QUOTE Nº.

DRAWING Nº. RG-40-20 SHEET 2 OF 2

REV