IF IN DOUBT ASK DO NOT SCALE

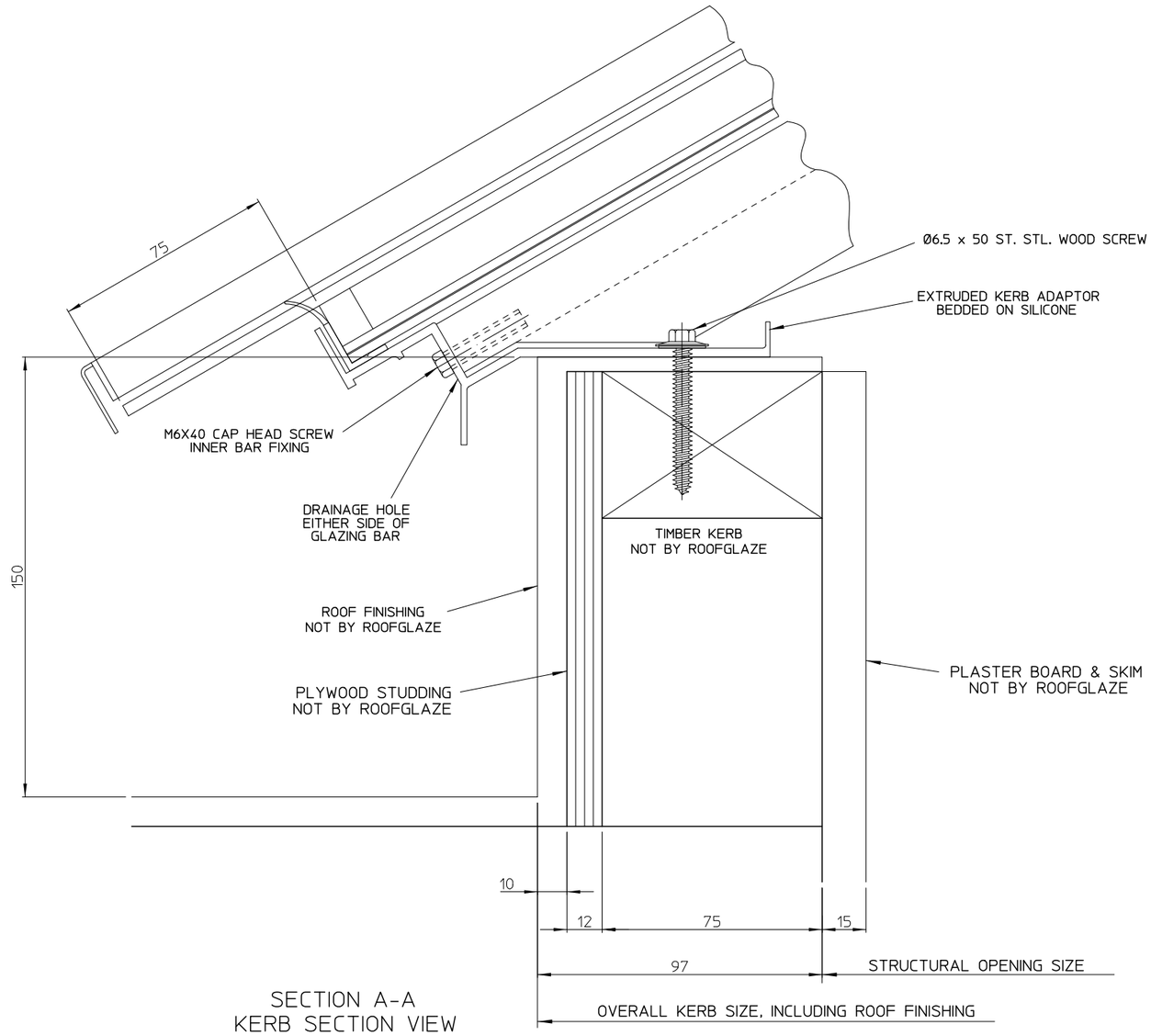

SECTION A-A
KERB SECTION VIEW

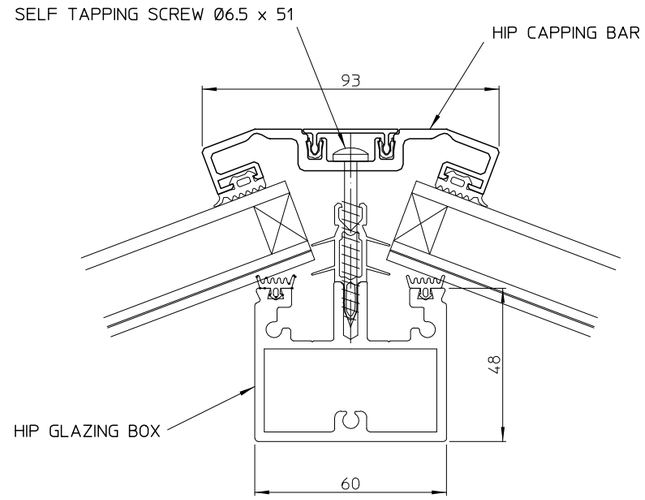

SECTION B-B
HIP RAFTER SECTION VIEW

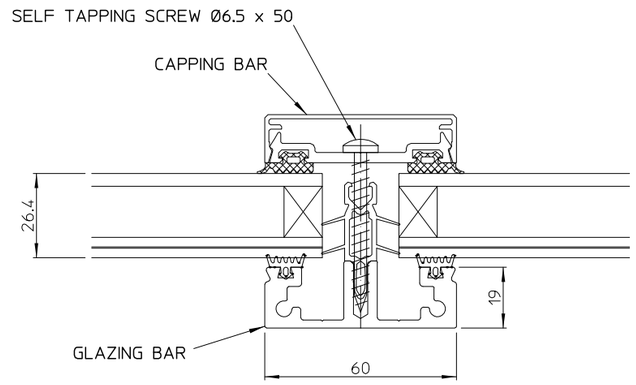

SECTION C-C
JACK RAFTER SECTION VIEW

THIS DRAWING MUST NOT BE COPIED OR PASSED TO A THIRD PARTY WITHOUT WRITTEN CONSENT FROM ROOFGLAZE LIMITED.	CHECKED DATE	TOLERANCE UNLESS OTHERWISE STATED ±3	MATERIAL ALUMINIUM GLASS					
	DRAWN R. PADDICK DATE 13-Feb-2009	DIMENSIONS IN MM SCALE 1:1 @ A1	FINISH POLYESTER POWDER COATING	REV	AMENDMENTS	SIGNED	CHECKED	DATE

Roofglaze Limited.
Unit 4, Little End Road, Eaton Socon, St Neots, Cambs. PE19 8JH
Telephone 01480 474797. Fax 01480 474774.
E-mail technical@roofglaze.co.uk

ROOFGLAZE

TITLE: RG-40 PYRAMID SPAN RANGE 2000 TO 3000

A1

QUOTE Nº.

DRAWING Nº. RG-40-30 SHEET 2 OF 2

REV