IF IN DOUBT ASK DO NOT SCALE

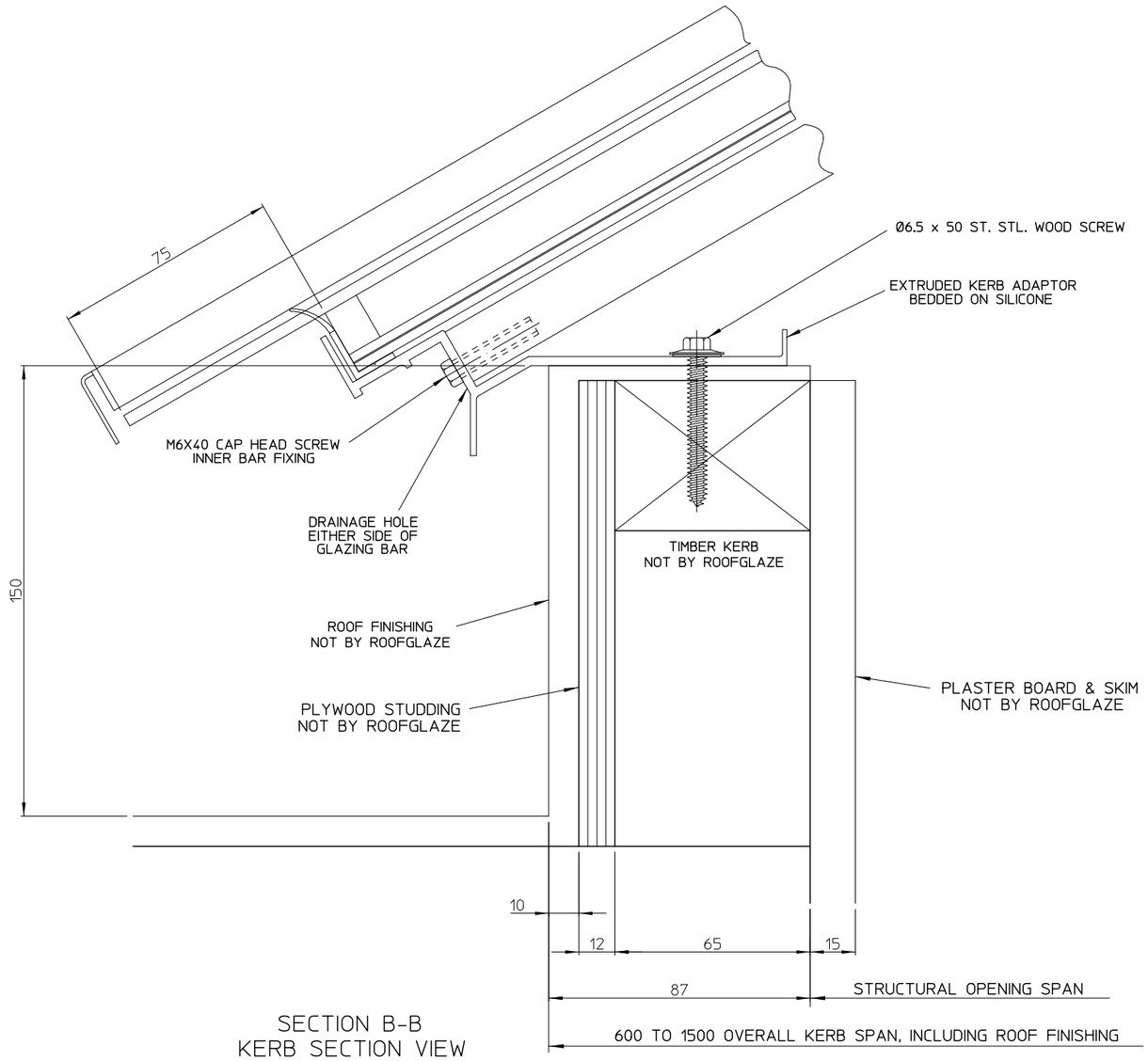

SECTION B-B
KERB SECTION VIEW

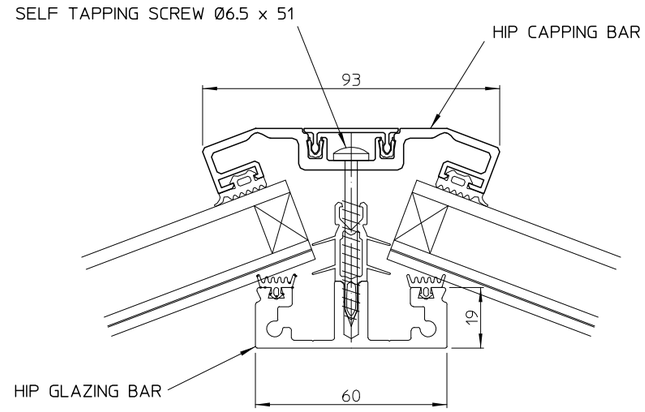

SECTION C-C
HIP RAFTER SECTION VIEW

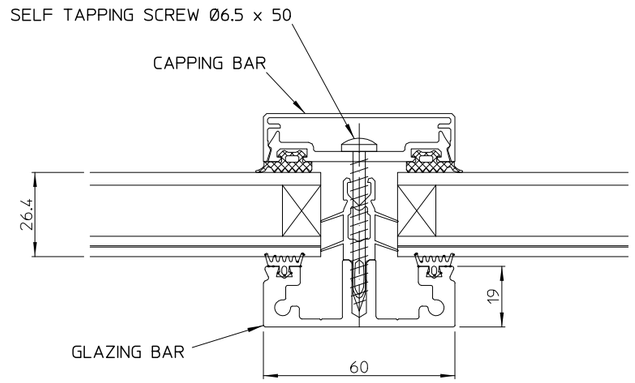

SECTION E-E
RAFTER SECTION VIEW

SPAN RANGE 600 TO 1500

THIS DRAWING MUST NOT BE COPIED OR PASSED TO A THIRD PARTY WITHOUT WRITTEN CONSENT FROM ROOFGLAZE LIMITED.	CHECKED DATE	TOLERANCE UNLESS OTHERWISE STATED ±3	MATERIAL ALUMINIUM GLASS					Roofglaze Limited. Unit 4, Little End Road, Eaton Socon, St Neots, Cambs. PE19 8JH Telephone 01480 474797. Fax 01480 474774. E-mail technical@roofglaze.co.uk	ROOFGLAZE
	DRAWN R. PADDICK DATE 13-Feb-2009	DIMENSIONS IN MM SCALE 1:1 @ A1	FINISH POLYESTER POWDER COATING	REV	AMENDMENTS	SIGNED	CHECKED	DATE	TITLE: RG-50 RIDGELIGHT HIP END A1 QUOTE Nº. DRAWING Nº. RG-50-40 SHEET 3 OF 3 REV