IF IN DOUBT ASK DO NOT SCALE

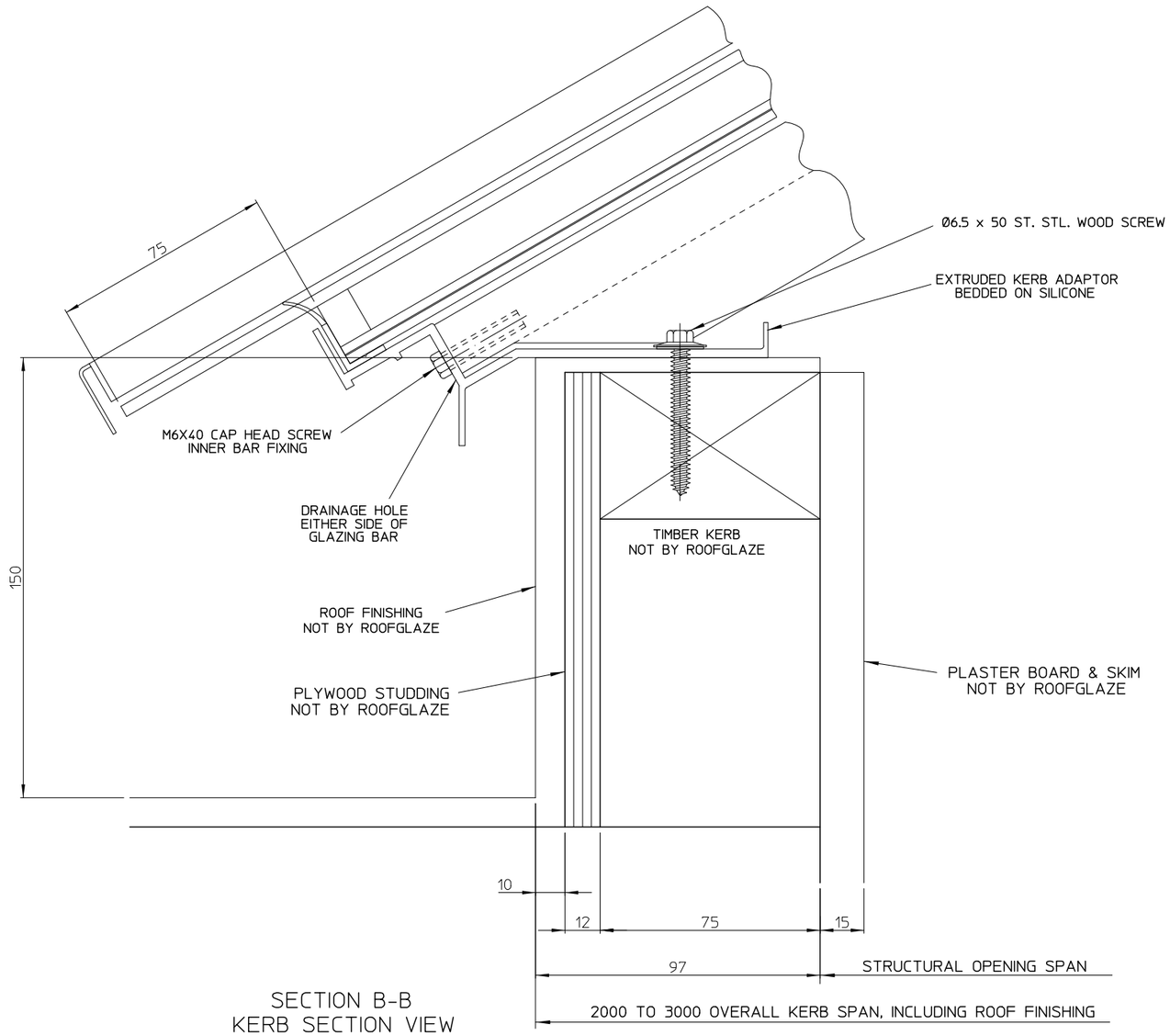

SECTION B-B
KERB SECTION VIEW

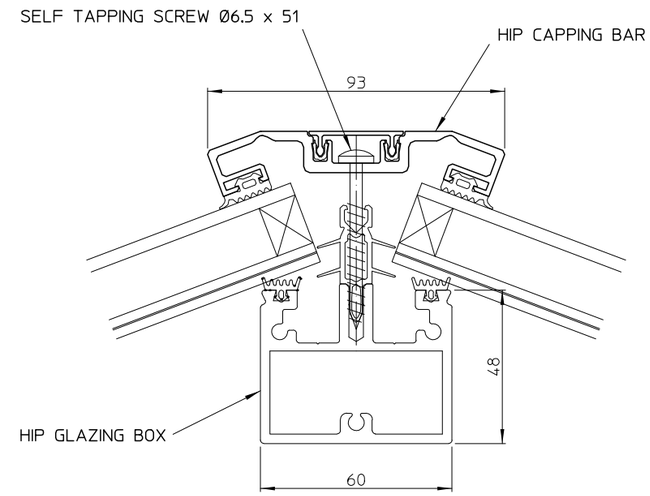

SECTION C-C
HIP RAFTER SECTION VIEW

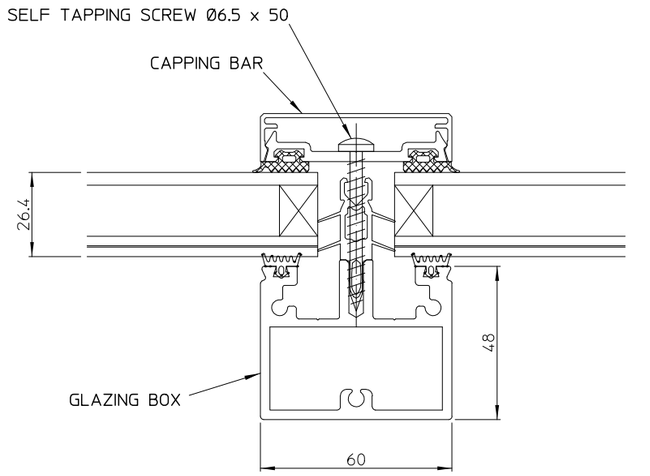

SECTION E-E
RAFTER SECTION VIEW

SPAN RANGE 2000 TO 3000

THIS DRAWING MUST NOT BE COPIED OR PASSED TO A THIRD PARTY WITHOUT WRITTEN CONSENT FROM ROOFGLAZE LIMITED.	CHECKED DATE	TOLERANCE UNLESS OTHERWISE STATED ±3	MATERIAL ALUMINIUM GLASS	REV	AMENDMENTS	SIGNED	CHECKED	DATE	Roofglaze Limited. Unit 4, Little End Road, Eaton Socon, St Neots, Cambs, PE19 8JH Telephone 01480 474797. Fax 01480 474774. E-mail technical@roofglaze.co.uk
	DRAWN R. PADDICK DATE 13-Feb-2009	DIMENSIONS IN MM SCALE 1:1 @ A1	FINISH POLYESTER POWDER COATING						TITLE: RG-50 RIDGELIGHT HIP END

ROOFGLAZE

A1	QUOTE Nº.	DRAWING Nº. RG-50-70 SHEET 3 OF 3	REV