DRAWING Nº.
RG-70-20
SHEET 1 OF 2

IF IN DOUBT ASK DO NOT SCALE

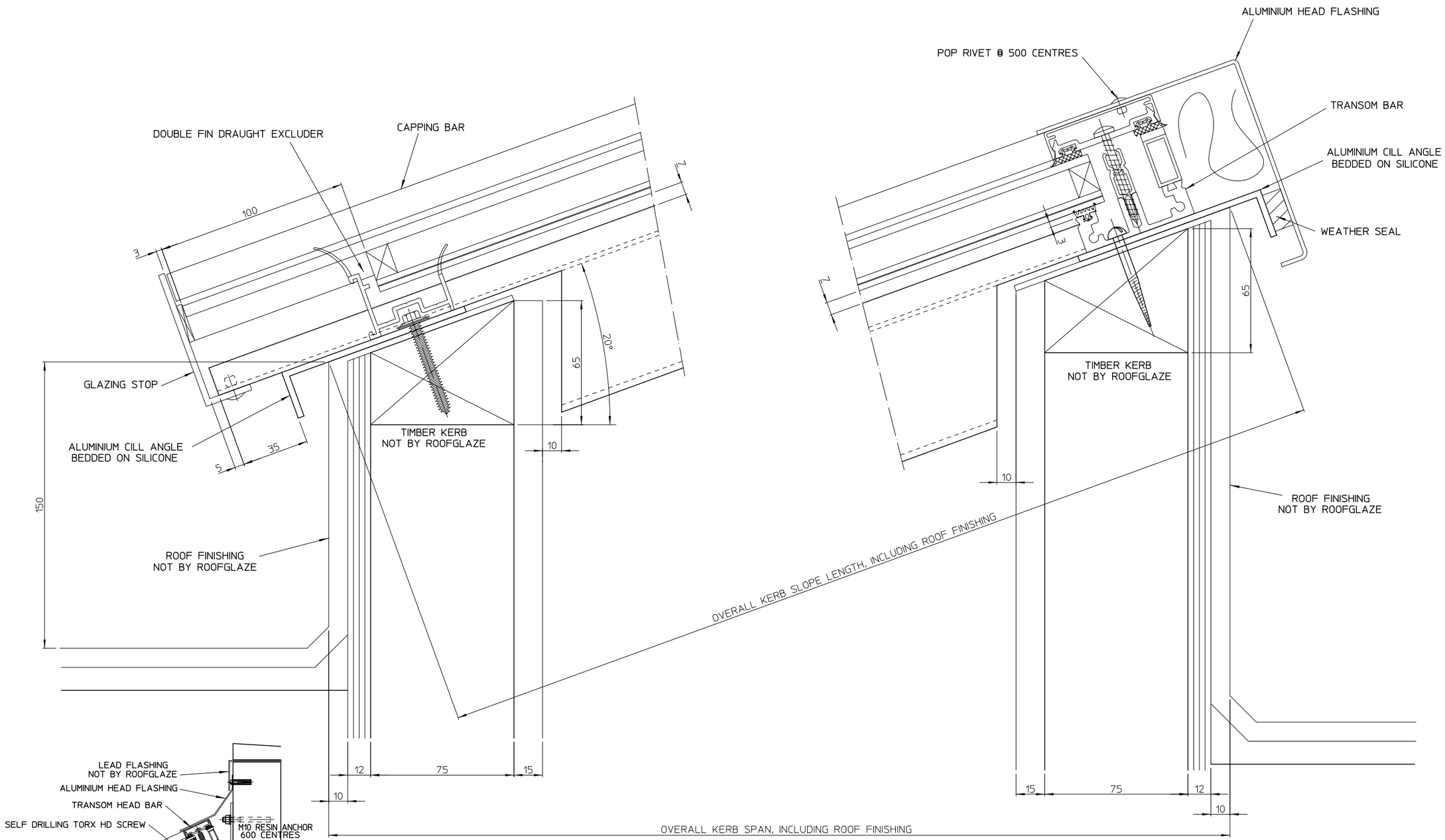

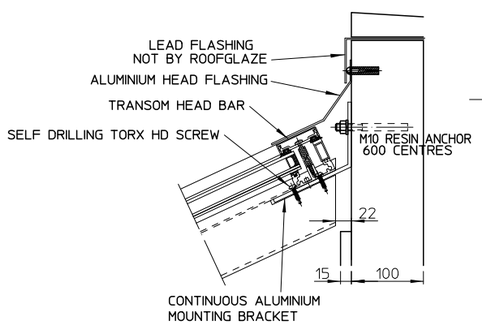

ALTERNATIVE HEAD DETAIL

FOR SPAN RANGE FROM 2200mm TO 3300mm

THIS DRAWING MUST NOT BE COPIED OR PASSED TO A THIRD PARTY WITHOUT WRITTEN CONSENT FROM ROOFGLAZE LIMITED.	CHECKED	TOLERANCE UNLESS OTHERWISE STATED ±3	MATERIAL ALUMINIUM GLASS	REV	AMENDMENTS	SIGNED	CHECKED	DATE	Roofglaze Limited. Unit 4, Little End Road, Eaton Socon, St Neots, Cambs, PE19 8JH Telephone 01480 474797. Fax 01480 474774. E-mail technical@roofglaze.co.uk
	DATE	DIMENSIONS IN MM	FINISH						ROOFGLAZE
	DRAWN R. PADDICK	SCALE 1:1 @ A1							TITLE: RG-70 MONO PITCH ROOFLIGHT SCHUCO BOX
	DATE 9-Sep-2008								A1
									QUOTE Nº.
									DRAWING Nº. RG-70-20 SHEET 1 OF 2
									REV