DRAWING Nº.
RG-70-20
SHEET 2 OF 2

IF IN DOUBT ASK DO NOT SCALE

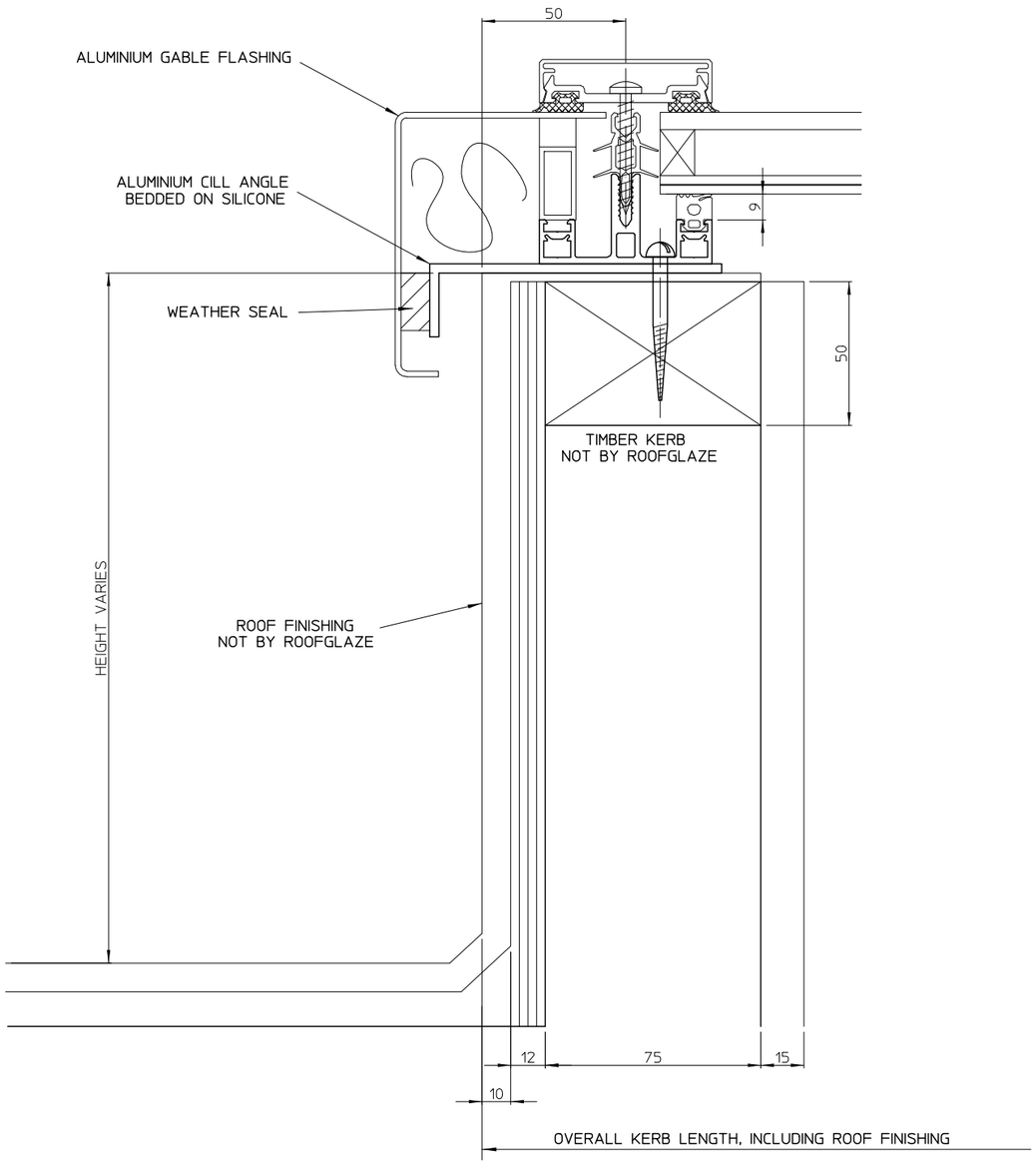

END KERB SECTION VIEW

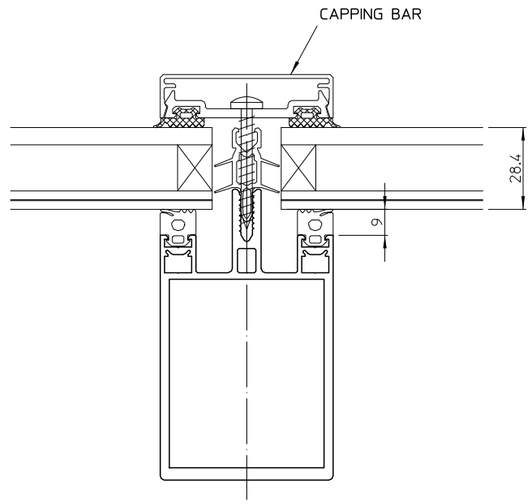

RAFTER SECTION VIEW

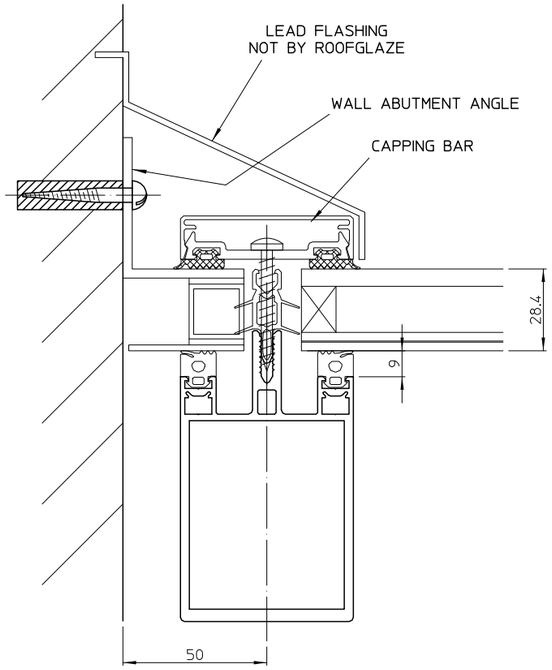

WALL ABUTMENT DETAIL

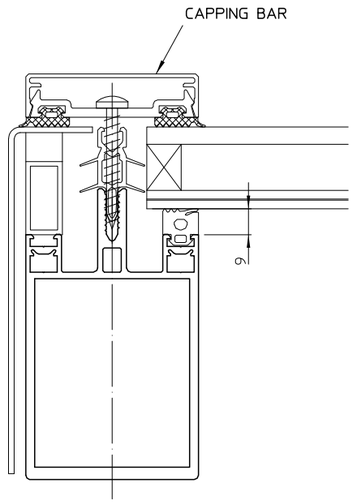

OPEN END DETAIL

THIS DRAWING MUST NOT BE COPIED OR PASSED TO A THIRD PARTY WITHOUT WRITTEN CONSENT FROM ROOFGLAZE LIMITED.

CHECKED	TOLERANCE UNLESS OTHERWISE STATED ±3	MATERIAL ALUMINIUM GLASS	
DATE	DIMENSIONS IN MM	FINISH	
DRAWN R. PADDICK	SCALE 1:1 @ A1		
DATE 9-Sep-2008			

REV	AMENDMENTS	SIGNED	CHECKED	DATE

Roofglaze Limited.
Unit 4, Little End Road, Eaton Socon, St Neots, Cambs. PE19 8JH
Telephone 01480 474797. Fax 01480 474774.
E-mail technical@roofglaze.co.uk

ROOFGLAZE

TITLE: RG-70 MONO PITCH ROOFLIGHT SCHUCO BOX

A1

QUOTE Nº.

DRAWING Nº. RG-70-20 SHEET 2 OF 2

REV