DRAWING Nº.
RG-70-30
SHEET 2 OF 2

IF IN DOUBT ASK DO NOT SCALE

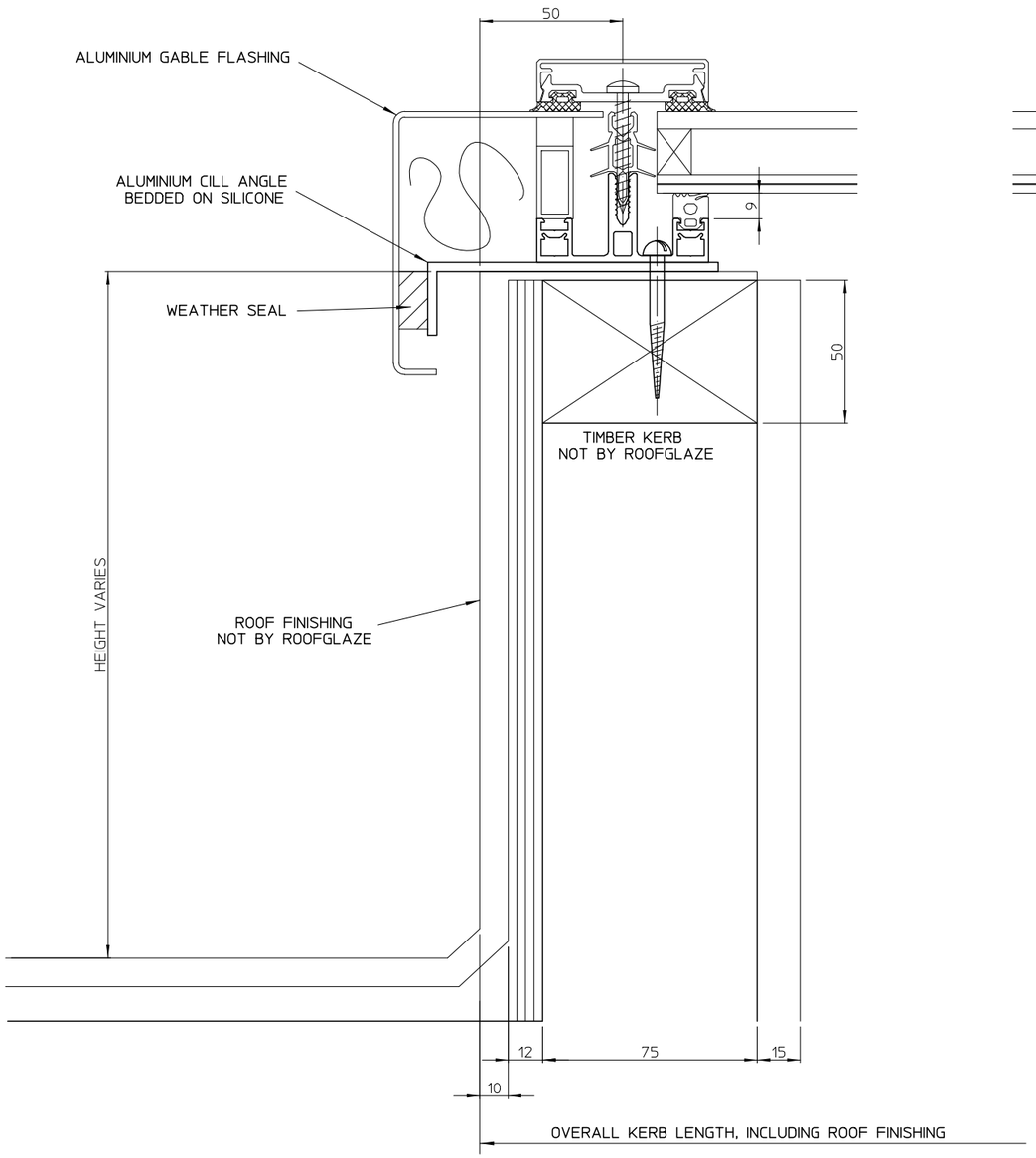

END KERB SECTION VIEW

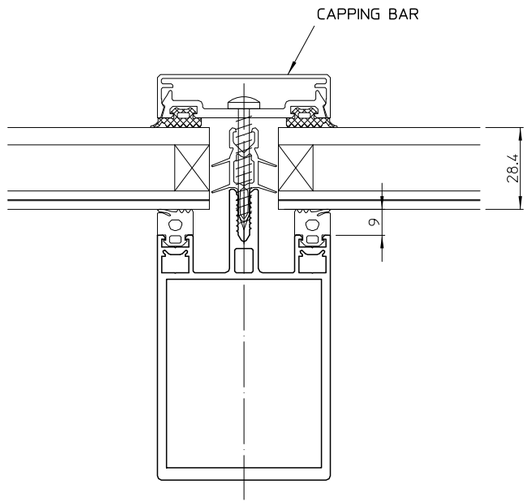

RAFTER SECTION VIEW

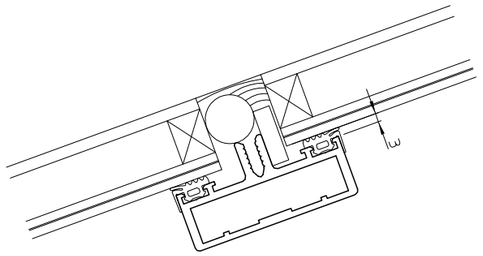

TRANSOM SECTION VIEW

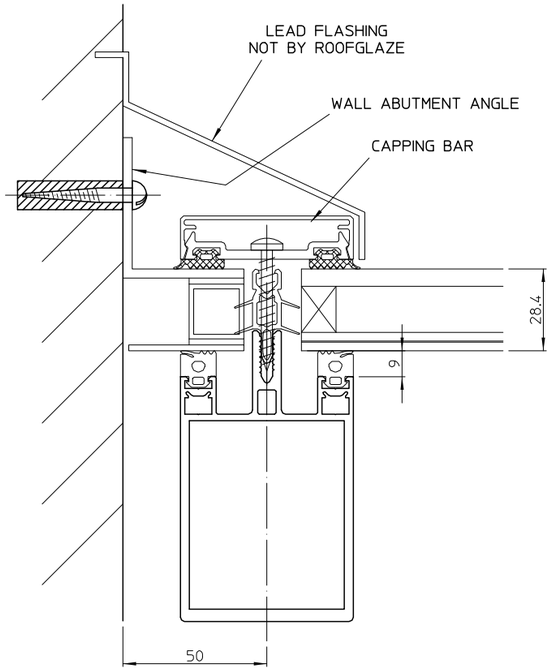

WALL ABUTMENT DETAIL

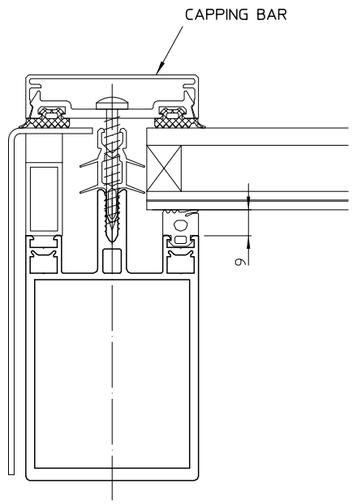

OPEN END DETAIL

THIS DRAWING MUST NOT BE COPIED OR PASSED TO A THIRD PARTY WITHOUT WRITTEN CONSENT FROM ROOFGLAZE LIMITED.	CHECKED DATE	TOLERANCE UNLESS OTHERWISE STATED ±3	MATERIAL ALUMINIUM GLASS	REV	AMENDMENTS	SIGNED	CHECKED	DATE	Roofglaze Limited. Unit 4, Little End Road, Eaton Socon, St Neots, Cambs. PE19 8JH Telephone 01480 474797. Fax 01480 474774. E-mail technical@roofglaze.co.uk
	DRAWN R. PADDICK DATE 9-Sep-2008	DIMENSIONS IN MM SCALE 1:1 @ A1	FINISH						TITLE: RG-70 MONO PITCH ROOFLIGHT SCHUCO BOX WITH TRANSOM

ROOFGLAZE

A1 | QUOTE Nº. | DRAWING Nº. RG-70-30 SHEET 2 OF 2 | REV